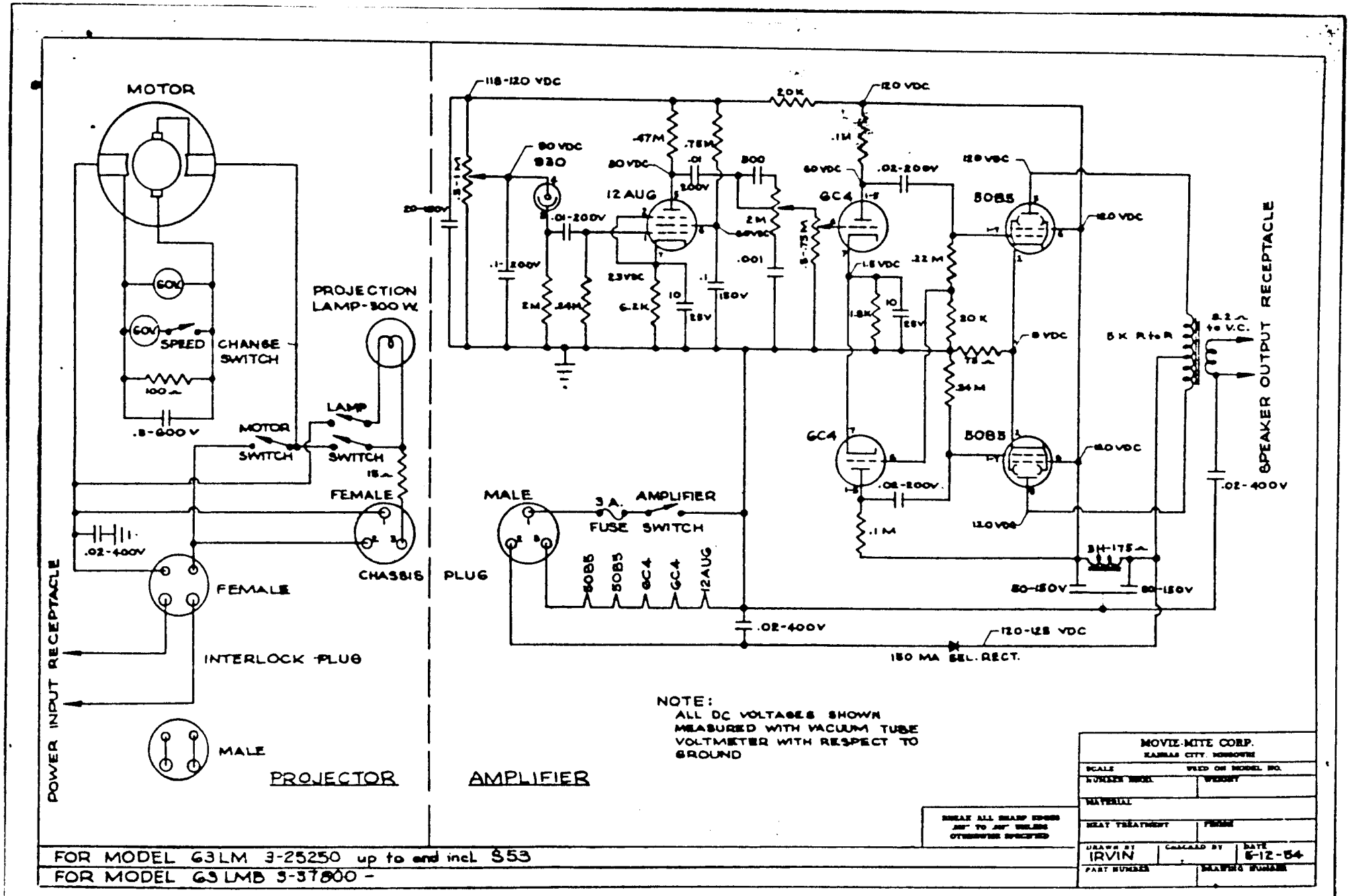
MOTOR
60W
60V
SPEED
CHANGE SWITCH
100Ω
.5-600V
PROJECTION LAMP-300 W.
LAMP
MOTOR SWITCH
SWITCH
15Ω
FEMALE
CHASSIS
.02-400V
FEMALE
INTERLOCK PLUG
MALE
POWER INPUT RECEPTACLE
PROJECTOR
118-120 VDC
20K
120 VDC
90 VDC
930
.47M
.75M
.1M
80 VDC
.01
500
60 VDC
.02-200V
120 VDC
12 AUG
GC4
50B5
.01-200V
2M
60VDC
.001
.5-.75M
.1-200V
23VDC
1.5 VDC
.22 M
2M
.24M
6.2K
10
.1
150V
25V
1.8K
10
25V
20 K
9 VDC
75Ω
.24 M
GC4
50B5
.02-200V
.1 M
120 VDC
3H-175Ω
50-150V
80-150V
.02-400V
120-125 VDC
150 MA SEL. RECT.
5K R to R
8.2Ω to V.C.
SPEAKER OUTPUT RECEPTACLE
.02-400V
MALE
3 A.
FUSE
AMPLIFIER
SWITCH
PLUG
50B5
50B5
GC4
GC4
12AUG
AMPLIFIER
NOTE:
ALL DC VOLTAGES SHOWN MEASURED WITH VACUUM TUBE VOLTMETER WITH RESPECT TO GROUND
MOVIE-MITE CORP.
KANSAS CITY, MISSOURI
SCALE
USED ON MODEL NO.
NUMBER MODEL
WEIGHT
MATERIAL
HEAT TREATMENT
FINISH
DRAWN BY
IRVIN
CHECKED BY
DATE
6-12-54
PART NUMBER
DRAWING NUMBER
BREAK ALL SHARP EDGES .005" TO .010" UNLESS OTHERWISE SPECIFIED
FOR MODEL 63LM 3-25250 up to and incl. S53
FOR MODEL 63LMB 3-37800 -