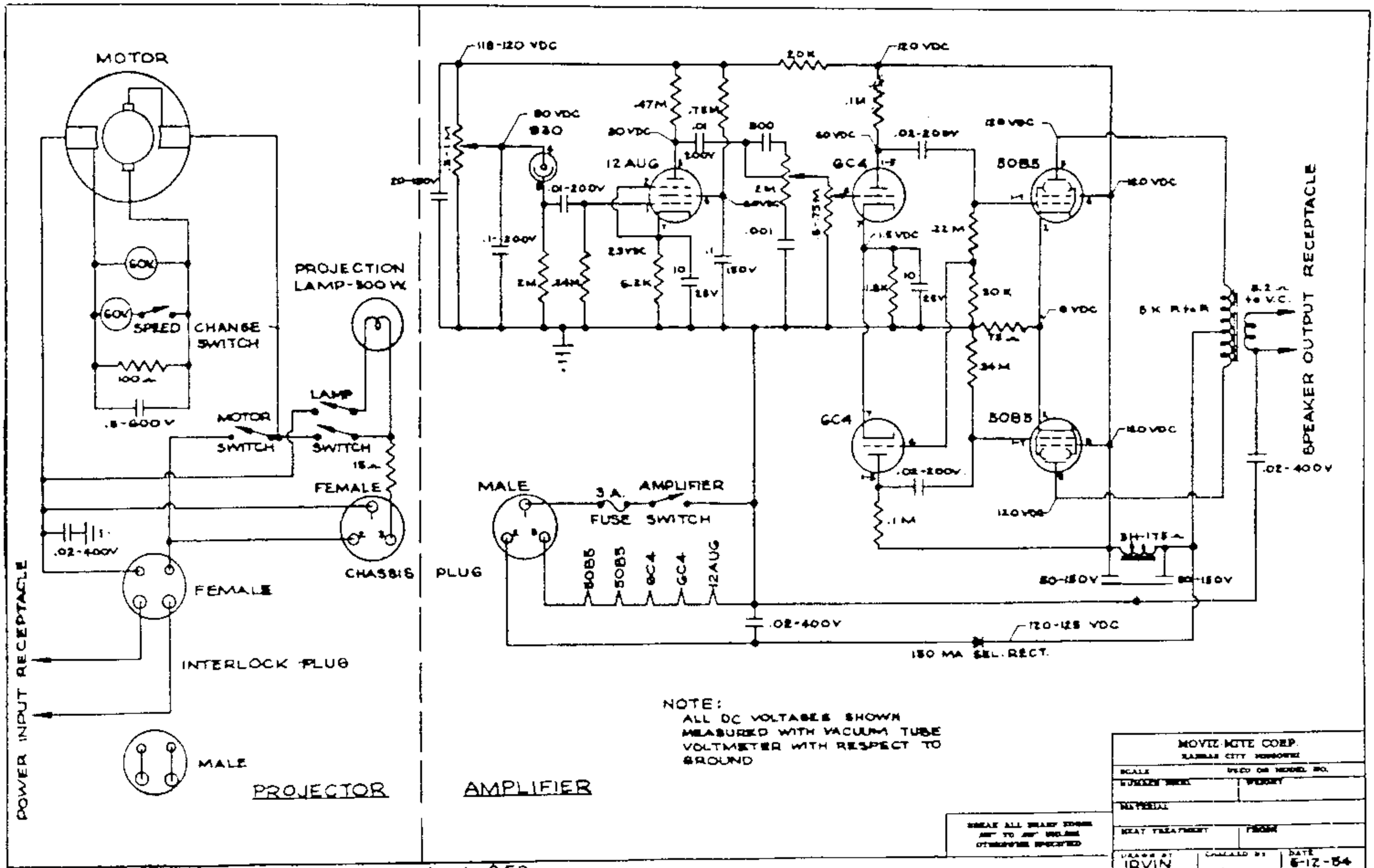

FOR MODEL G3LM 3-25250 up to and incl. S53

FOR MODEL G3LMB 3-37800 -